BLINDER E 1300

QUICK START GUIDE

WHAT’S IN THE PACK

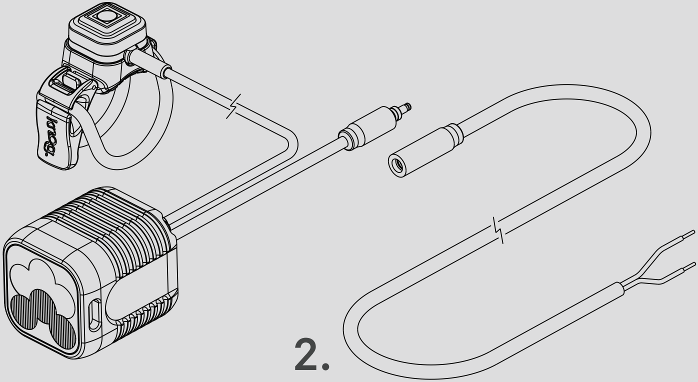

1.

2.

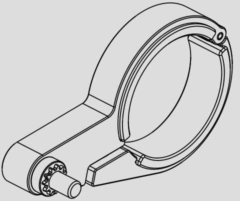

3.

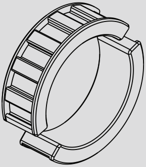

4.

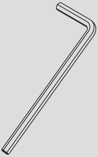

5.

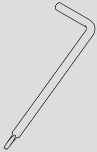

6.

1. BLINDER 1300 LIGHTHEAD
2. E-BIKE CABLE

3. BAR-MOUNT (PRE-INSTALLED)
4. SHIMS 31.8MM / 35MM (35MM PRE-INSTALLED)
5. HEX KEY
6. TORX SCREWDRIVER

⚠

KNOG'S E-BIKE LIGHTS ARE POWERED BY THE LIGHTING OUTPUT OF AN E-BIKE MOTOR, AND REQUIRE ELECTRICAL INSTALLATION- POTENTIALLY INVOLVING SOME DISASSEMBLY OF YOUR E-BIKE AND ADDITIONAL WIRING.

MAKE SURE YOUR E-BIKE'S LIGHTING OUTPUT CAPABILITY IS MATCHED TO THE POWER REQUIREMENT OF THE BLINDER E-BIKE LIGHT BEFORE ATTEMPTING INSTALLATION.

***SEE POWER SCALING MODE SECTION BELOW FOR INSTRUCTIONS ON HOW TO SCALE DOWN THE POWER REQUIREMENTS OF THE BLINDER E-BIKE LIGHT TO SUIT E-BIKES WITH LOWER LIGHTING POWER OUTPUTS.**

CONTACT YOUR E-BIKE/E-BIKE MOTOR MANUFACTURER FOR DETAILED INSTRUCTIONS.

NOTE THAT ANY DISASSEMBLY MAY VOID YOUR WARRANTY.

KNOG ADVISE TO HAVE A TRAINED PROFESSIONAL INSTALL YOUR BLINDER E-BIKE LIGHT.

TECHNICAL DATA

OUTPUT — 1300 LUMEN
WATTAGE — 11W
INPUT VOLTAGE — 12V (5-14V) DC ~~AC~~

MOUNTING

USE THE HEX KEY PROVIDED TO INSTALL THE MOUNT TO THE LIGHTHEAD (IN MOST CASES, THE LIGHTHEAD & BAR-MOUNT WILL BE PRE-INSTALLED).

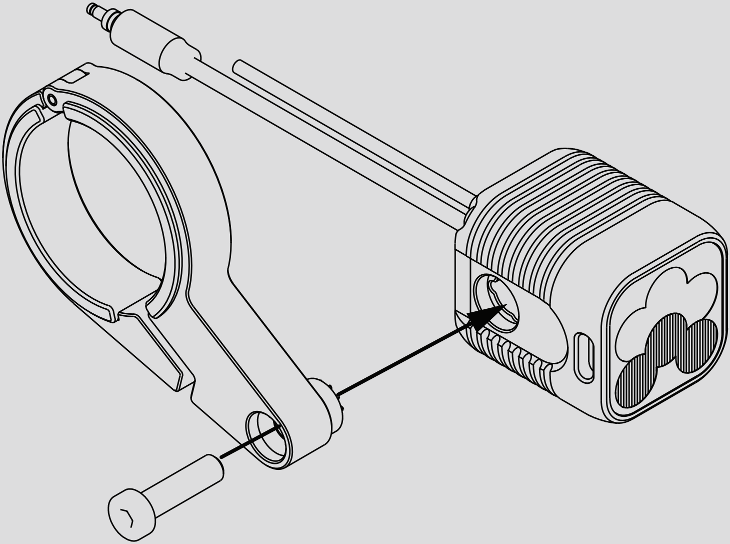

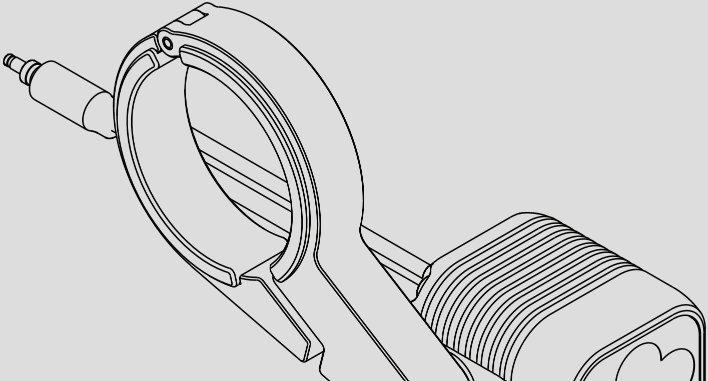

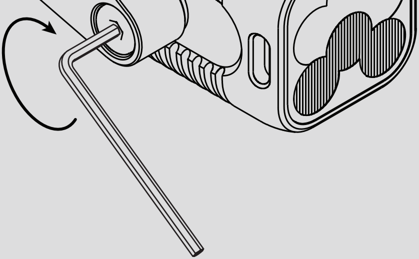

USE THE HEX KEY TO TIGHTEN THE BOLT & SECURE THE BAR-MOUNT TO THE LIGHTHEAD.

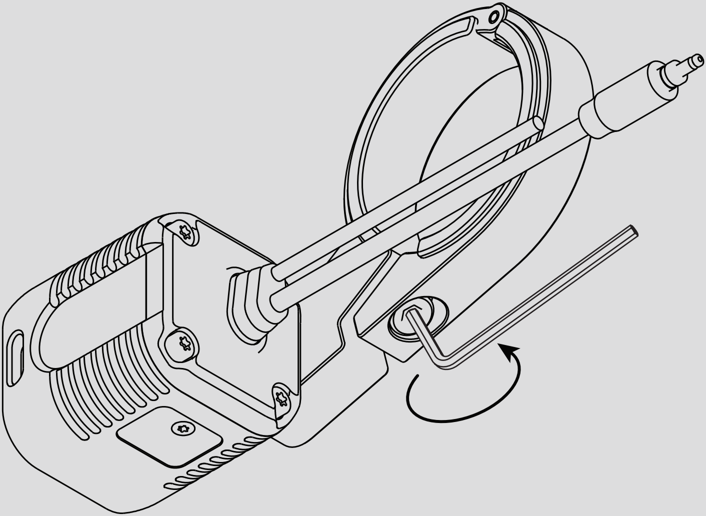

LOOSEN THE BOLT AT THE BASE OF THE BAR-MOUNT & SEPARATE AT THE HINGE.

ENSURE YOU HAVE INSTALLED THE CORRECT SIZED SHIM TO SUIT YOUR HANDLE BAR!

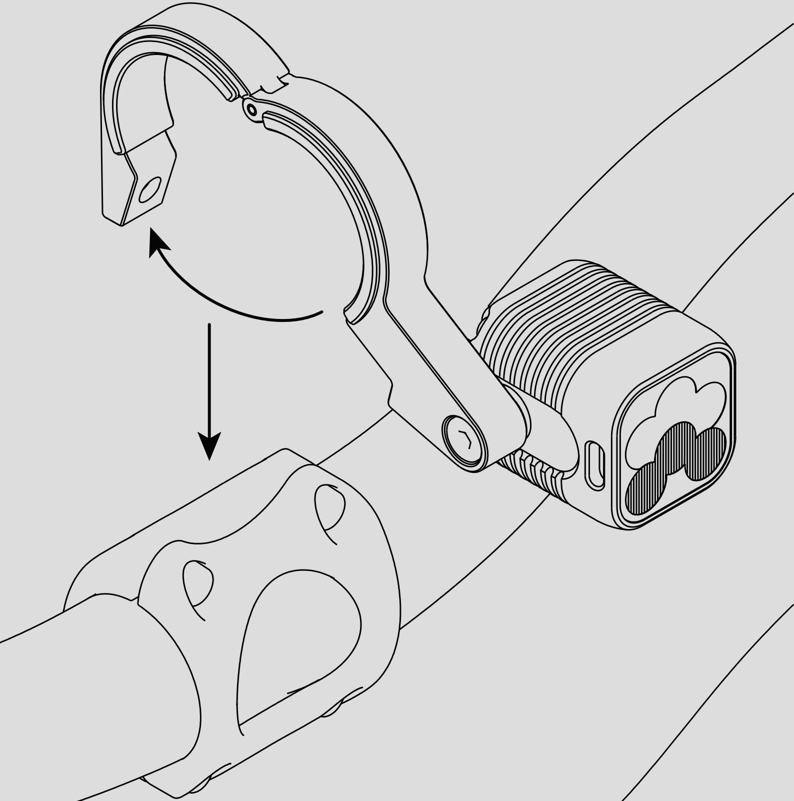

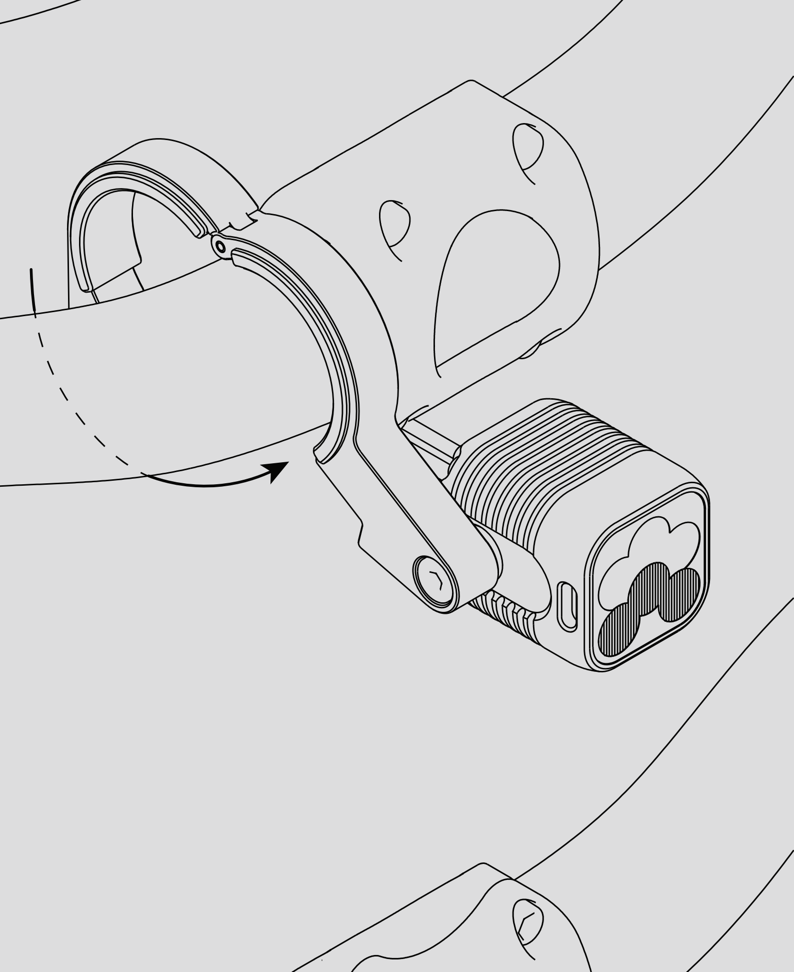

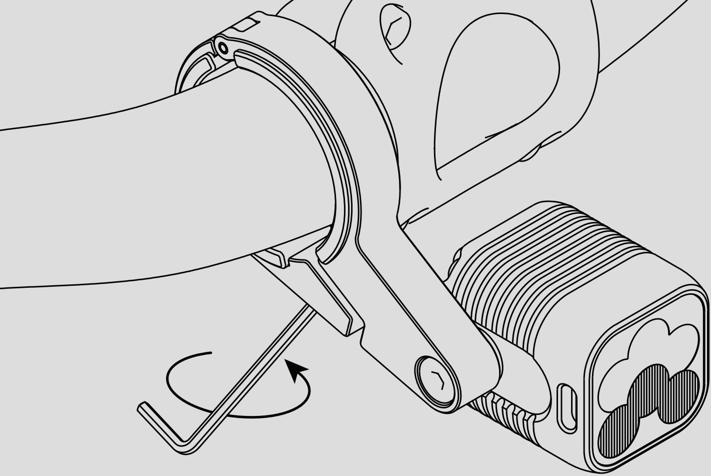

USE THE HEX KEY TO TIGHTEN THE BOLT & SECURE THE BAR-MOUNT TO THE HANDLE-BAR.

ADJUSTING THE BEAM ANGLE

USE THE HEX KEY TO LOOSEN THE BOLT & ROTATE THE LIGHTHEAD TO YOUR CHOSEN ANGLE.

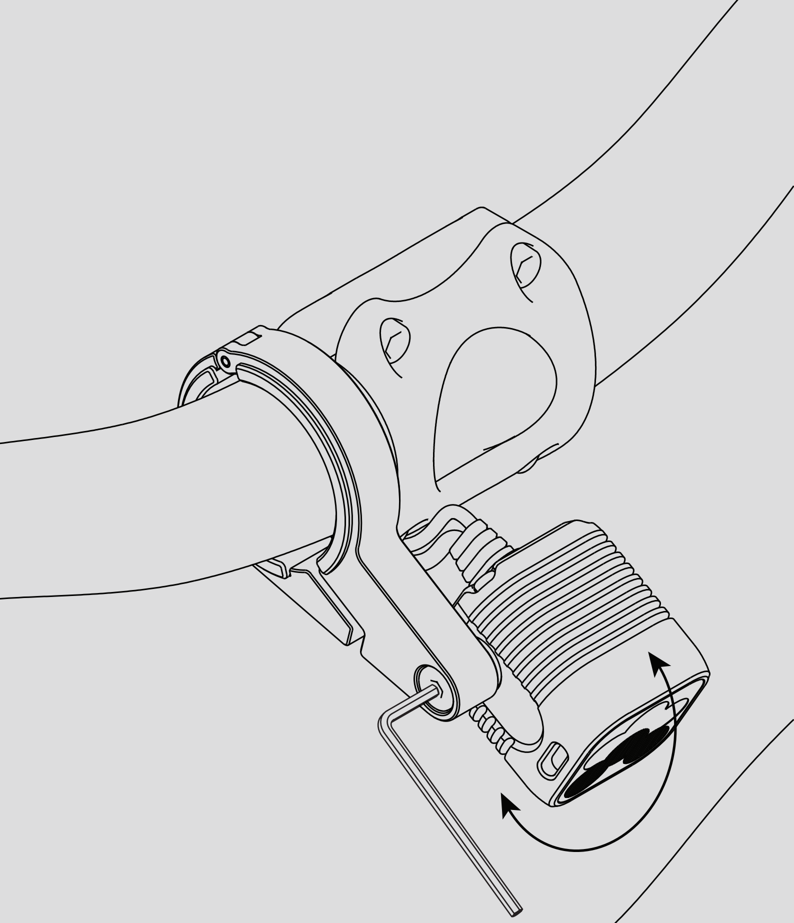

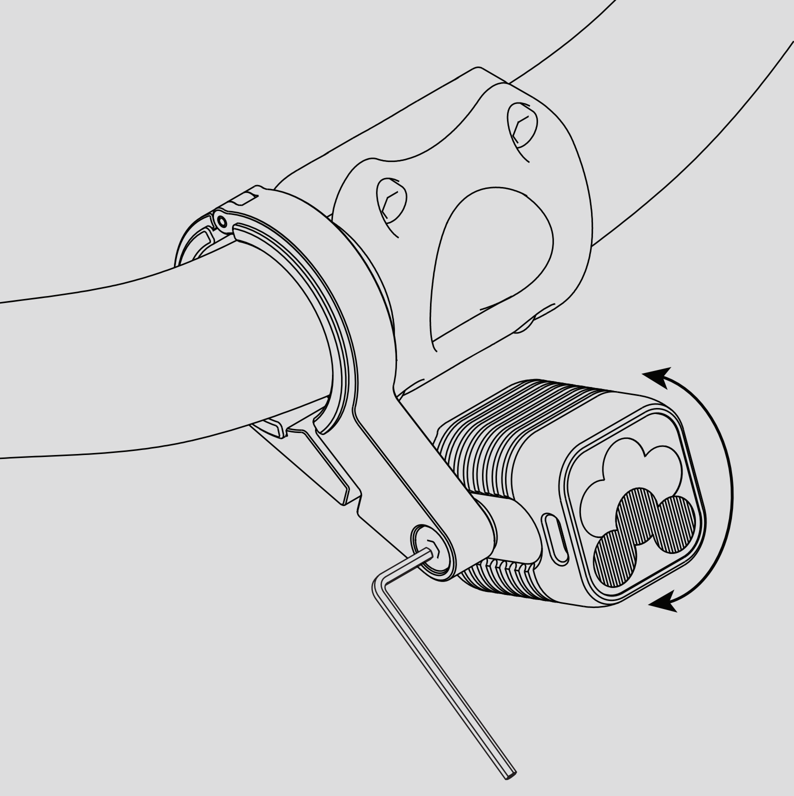

USE THE HEX KEY TO TIGHTEN THE BOLT & LOCK THE LIGHT AT THE CHOSEN ANGLE.

INSTALLATION & WIRING

KNOG RECOMMENDS THAT OUR BLINDER E-BIKE LIGHTS BE INSTALLED BY A PROFESSIONAL. THE DIAGRAM BELOW SHOWS THE POLARITY OF THE SUPPLIED E-BIKE CABLE & IS FOR GENERAL INFORMATION ONLY.

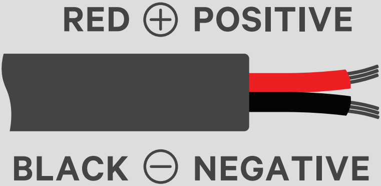

BEFORE INSTALLATION ENSURE YOUR E-BIKE MOTOR HAS A LIGHT OUTPUT, DO NOT ATTEMPT TO CONNECT YOUR BLINDER E-BIKE LIGHT DIRECTLY TO YOUR E-BIKE BATTERY.

OPERATION

POWER BUTTON

PRESS & HOLD TO POWER ON OR OFF
DOUBLE PRESS TO TOGGLE BETWEEN STEADY & FLASHING MODE BANKS
QUICK PRESS TO ADVANCE TO NEXT MODE

POWER BUTTON

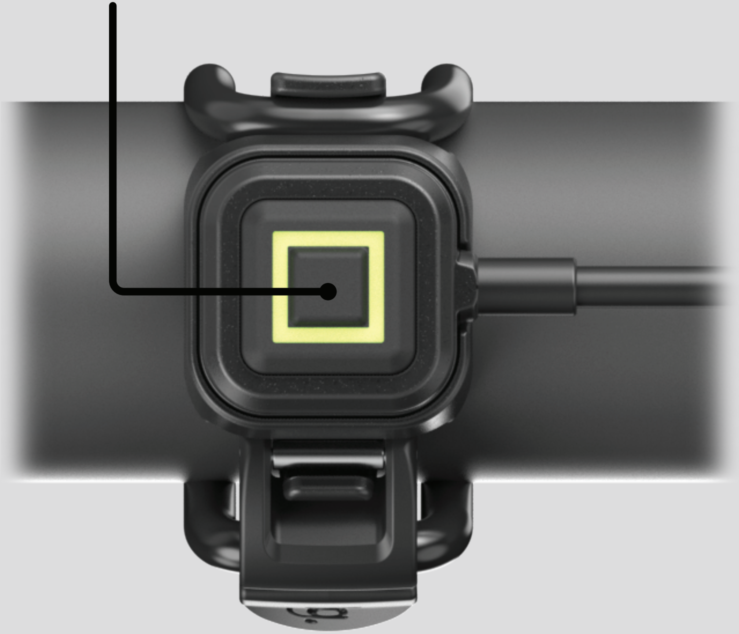

STATUS LED

THE STATUS LED WILL SHINE BLUE WHEN THE LIGHT IS IN HIGH MODE. FOR ALL OTHER MODES THE STATUS LED WILL SHINE GREEN.

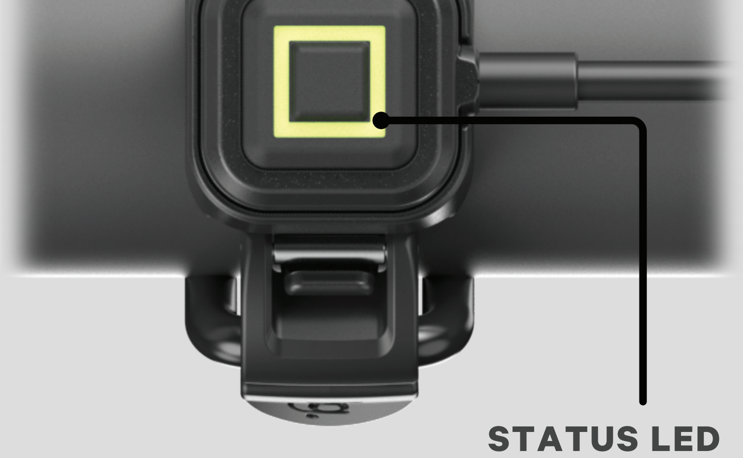

POWER SCALING MODE

⚠

THE E-BIKE LIGHTING OUTPUT POWER CAPABILITY VARIES BETWEEN BRAND AND MODEL. THE POWER SCALING MODE OFFERED ON KNOG BLINDER LIGHT HEADS ALLOWS THE MAXIMUM POWER REQUIREMENT OF THE LIGHT HEAD TO BE ADJUSTED TO MATCH THE CAPABILITIES OF THE E-BIKE.

TO ACCESS THE POWER SCALING MODE, FOLLOW THESE STEPS:

STARTING WITH YOUR E-BIKE AND LIGHTING OUTPUT TURNED OFF, HOLD DOWN THE KNOG POWER BUTTON.

2. TURN ON YOUR E-BIKE AND ITS LIGHT OUTPUT.

3. RELEASE THE KNOG POWER BUTTON.

4. IN POWER SCALING MODE, THE MAIN LEDS ON THE LIGHT HEAD WILL BE OFF, AND THE SELECTED POWER LEVEL WILL BE INDICATED BY THE FLASHING STATUS LED.

5. A SHORT PRESS OF THE POWER BUTTON WILL TOGGLE THROUGH THE POWER LEVELS.

POWER LEVEL 1: 5W (1 FLASH GREEN)

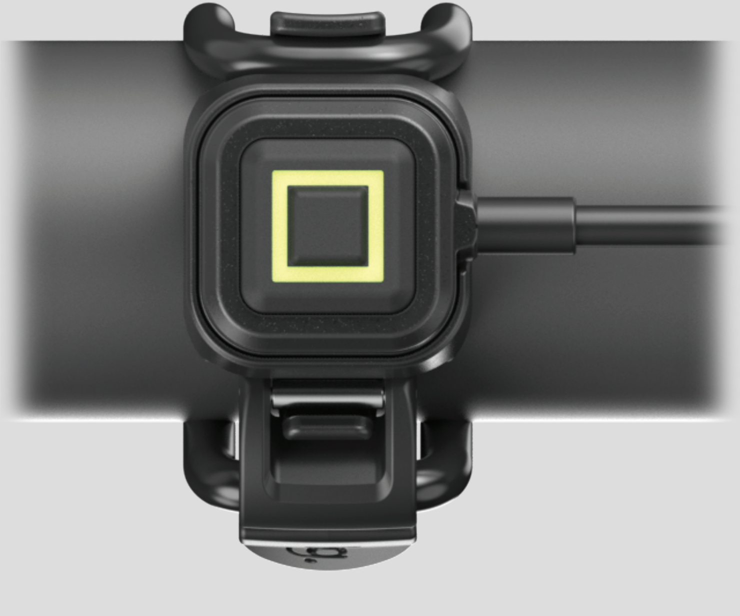

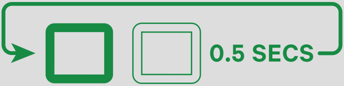

POWER LEVEL 2: 7W (2 FLASHES GREEN)

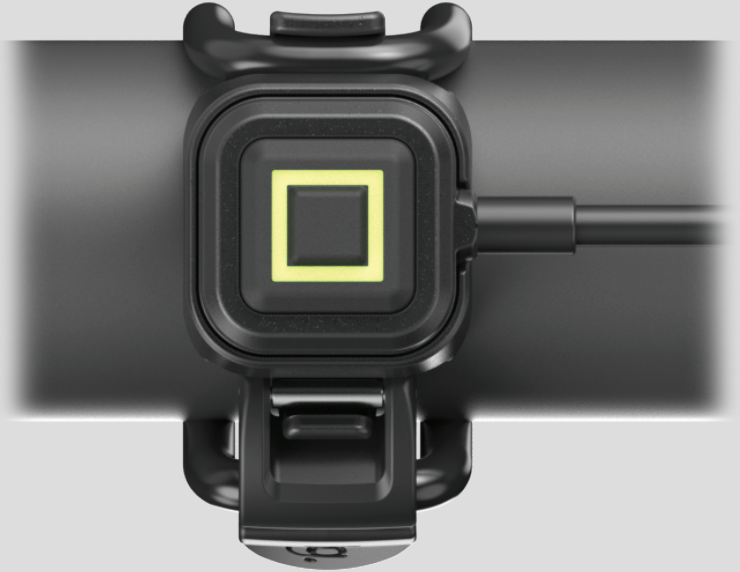

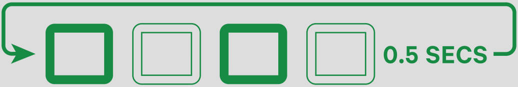

POWER LEVEL 3: 10W (3 FLASHES GREEN)

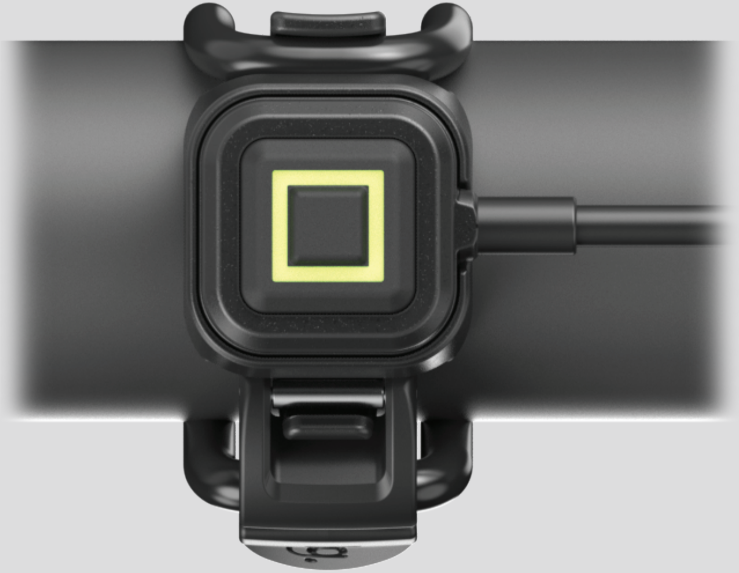

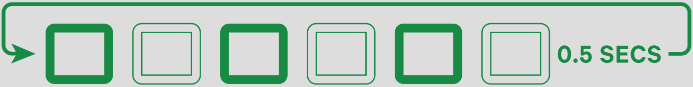

POWER LEVEL 4: 11W (4 FLASHES BLUE)

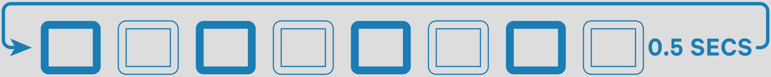

LONG PRESS THE REMOTE POWER BUTTON TO SAVE THE POWER LEVEL & EXIT POWER SCALING MODE.

MODES

MODE	LUMENS
High	1300 @ 11W
Medium	600
Low	350
Pulse	600
Strobe	600
Eco	550

*Note this table refers to outputs in Power Scaling Mode-4.

DESIGNED BY KNOG
MELBOURNE, AUSTRALIA

2 YEAR WARRANTY

KNOG.COM